(EN) Assembly instructions

(DE) **Montageanleitung**
(FR) **Notice de Montage**
(NL) **Montage Instructies**
(DA) **Montagevejledning**
(SV) **Monteringsanvisning**
(NO) **Montasjeveiledning**
(FI) **Kokoonpano-ohjeet**
(IT) **Istruzioni di Montaggio**
(CS) **Montážní Návod**
(PL) **Instrukcja Montażu**
(SL) **Navodila za Montažo**
(HU) **Szerelési útmutató**
(HR) **Skupština Upute**
(BS) **Skupština Uputstvo**
(RO) **Instrucțiuni de Asamblare**
(SK) **Popis konštrukcie**
(RU) **Инструкция по Монтажу**
(UK) **Інструкція по монтажу**

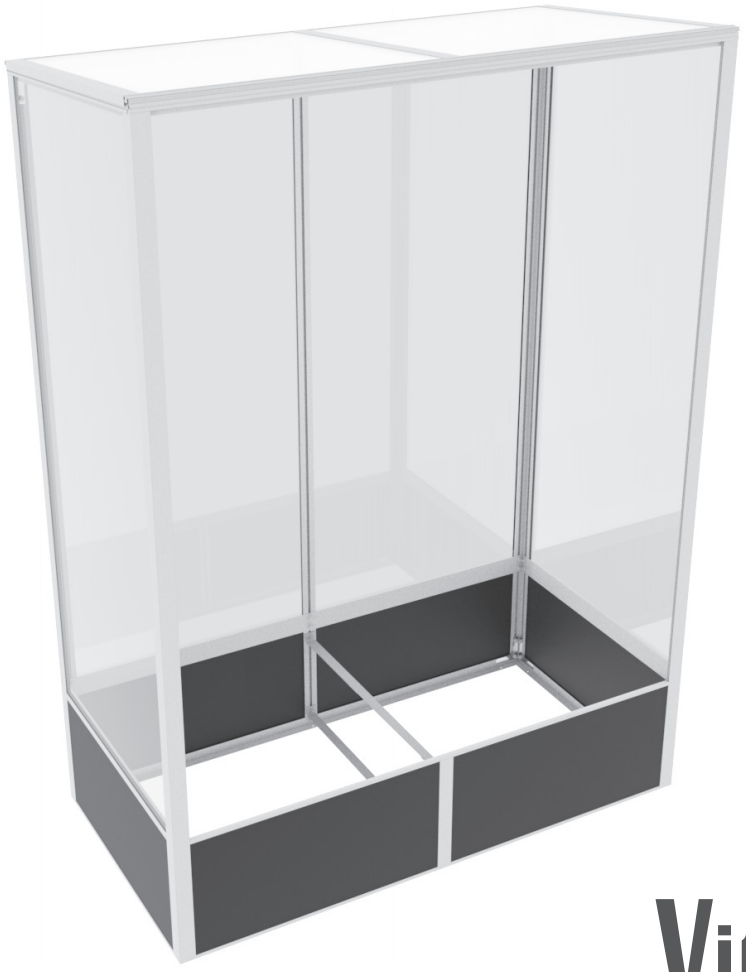

Vitavía
– makes living grow

VM0068-TH
900
FPG_ASP

0115FPG_ASP.01.2509

FPG_ASP

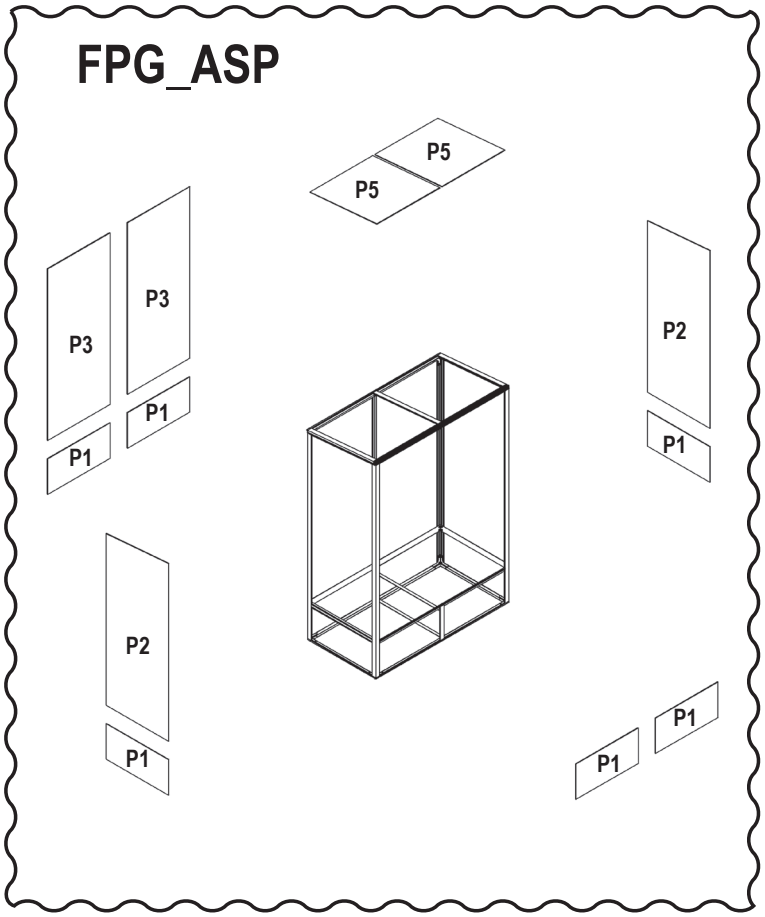
P5
P5
P3
P3
P1
P1
P2
P1
P2
P1
P1
P1

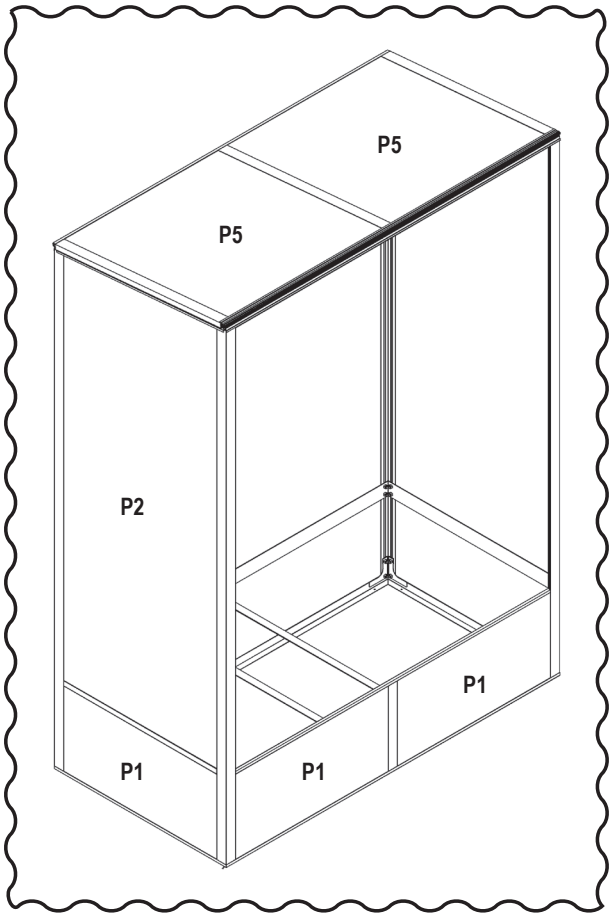
P5
P5
P2
P1
P1
P1

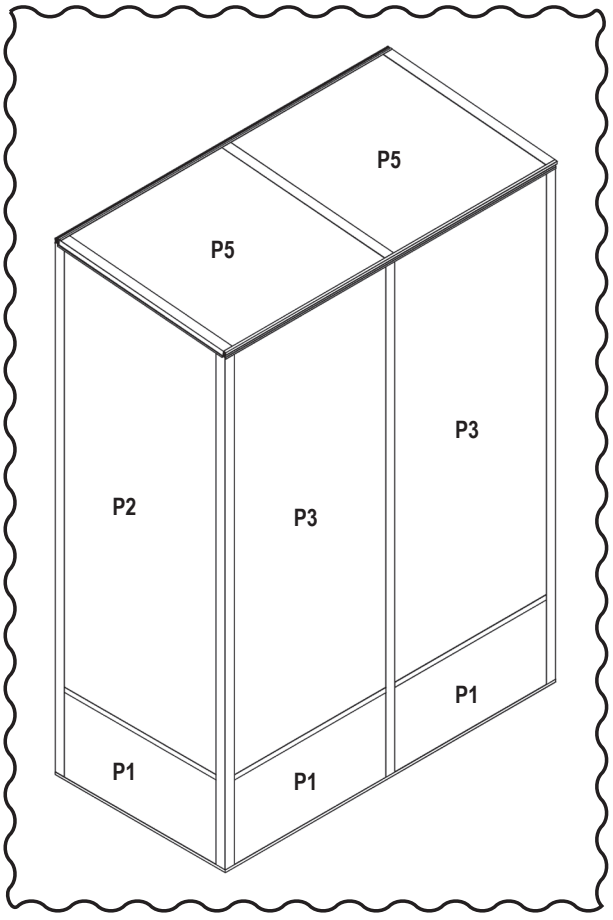
P5
P5
P3
P2
P3
P1
P1
P1

FPG	No.		Sect. Ref.	mm	Quantity
P2	40007691	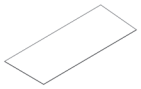	1 - 2	610 x 1503_1451	2x
P3	40007690	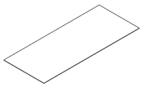	3	610 x 1451	2x
P5	40007926	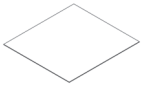	4	614 x 657	2x
Total					6x

ASP	No.		Sect. Ref.	mm	Quantity
P1	40007851	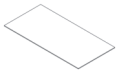	1 - 3	610 x 300	6x
Total					6x

1 FPG

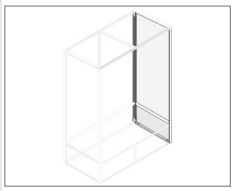



FPG		mm	900	
P2	40007691	610 x 1503_1451	1x	
Total			1x	



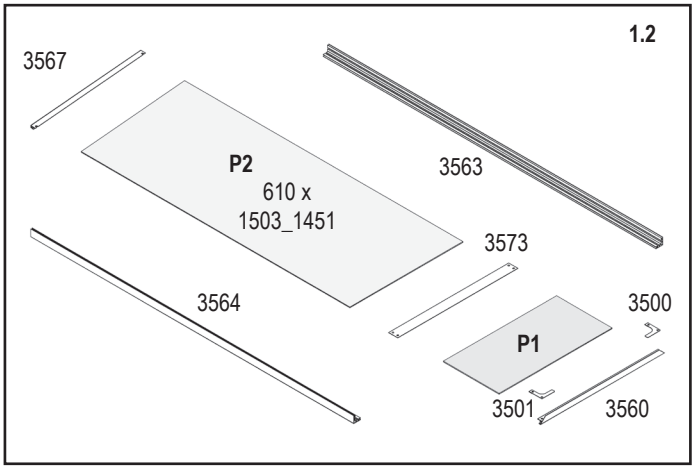

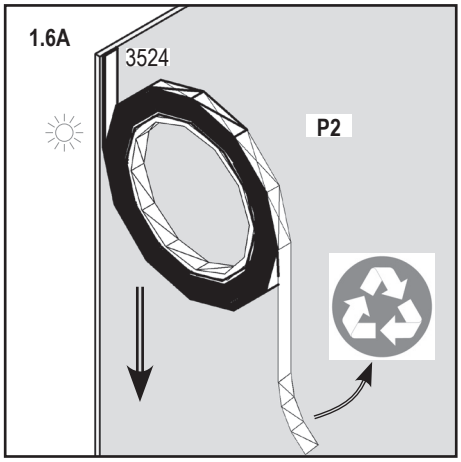

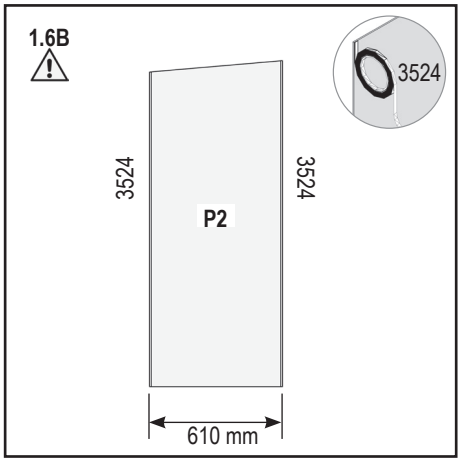

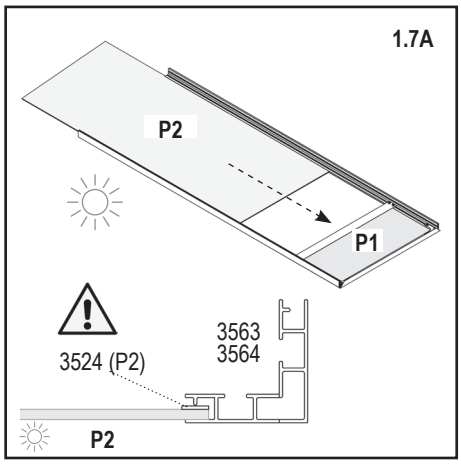

Important! Outside Recycle

2 FPG

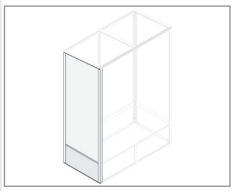



	FPG	mm	900	
P2	40007691	610 x 1451_1503	1x	
Total			1x	



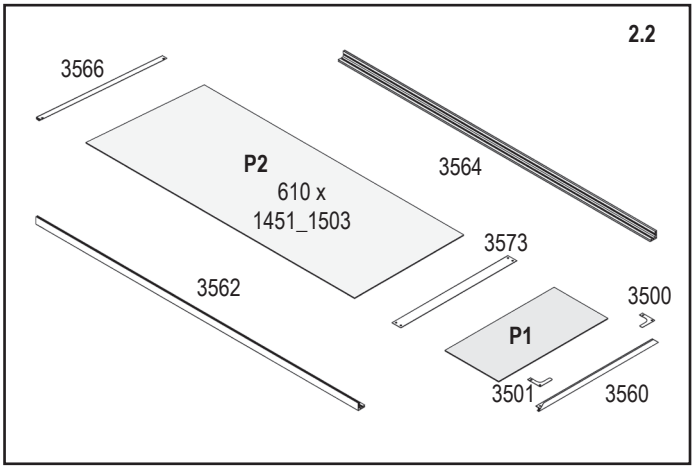

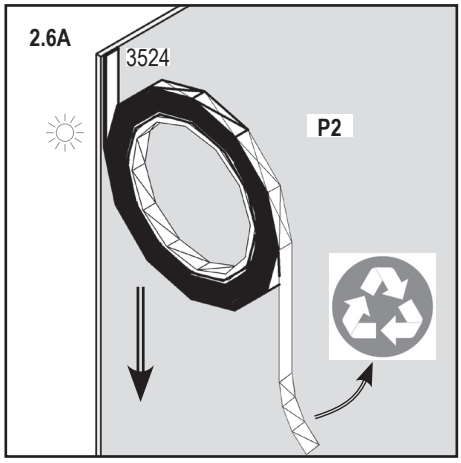

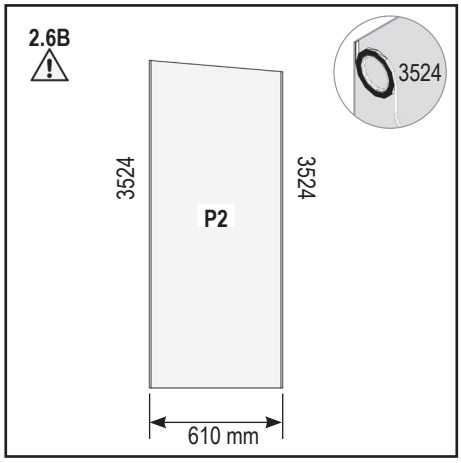

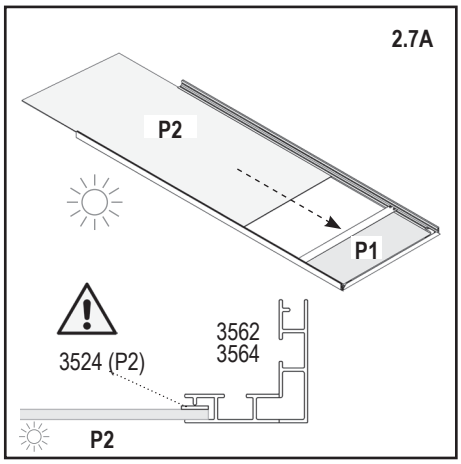

Important! Outside Recycle

3 / 3_3 FPG

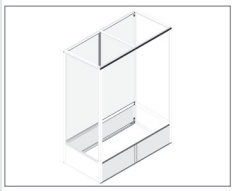





FPG		mm	900	
P3	40007690	610 x 1451	2x	
Total			2x	

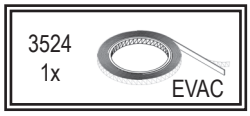

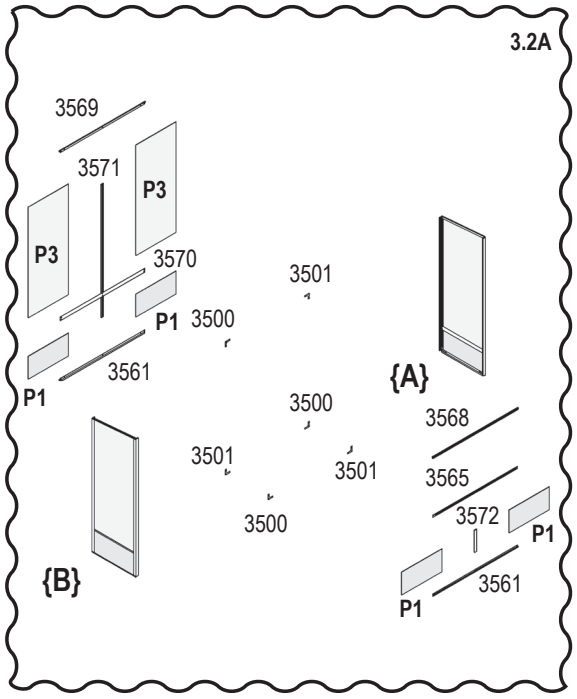

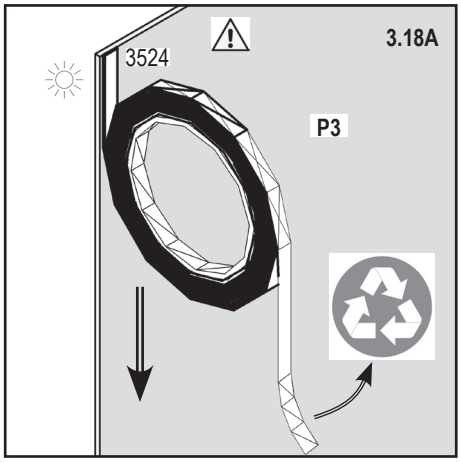

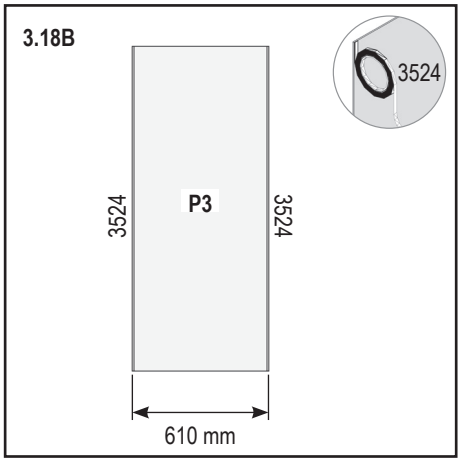

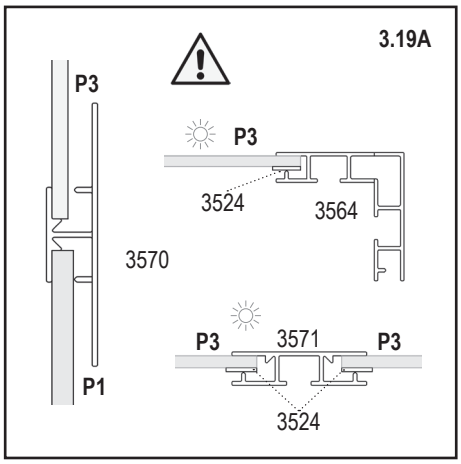

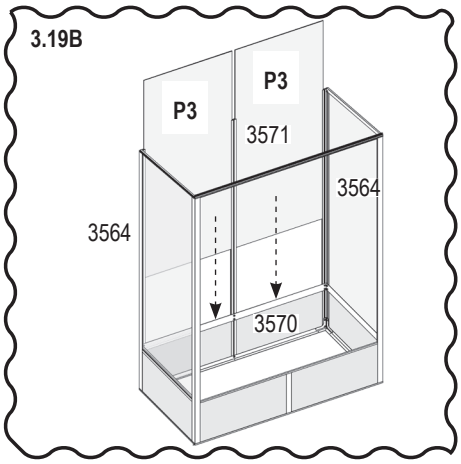

Important! Outside Recycle

4 FPG

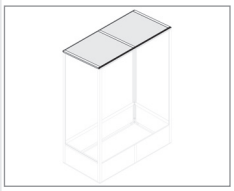



	FPG	mm	900	
P5	40007926	614 x 657	2x	
Total			2x	



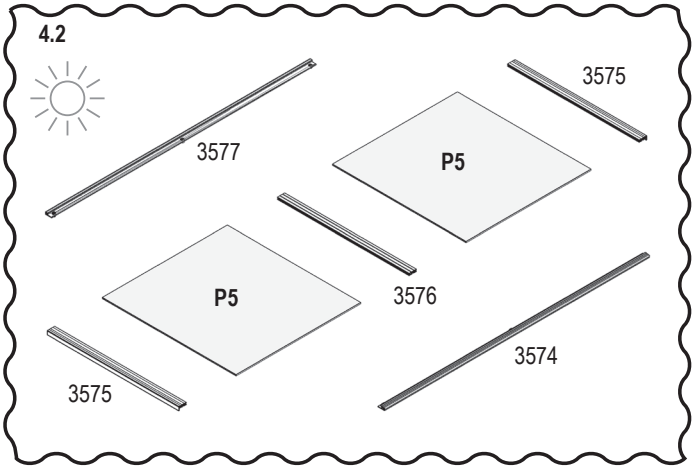

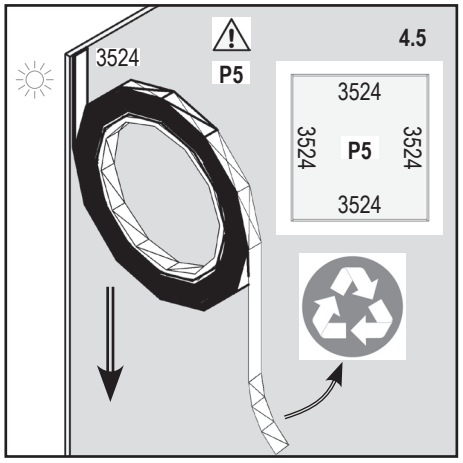

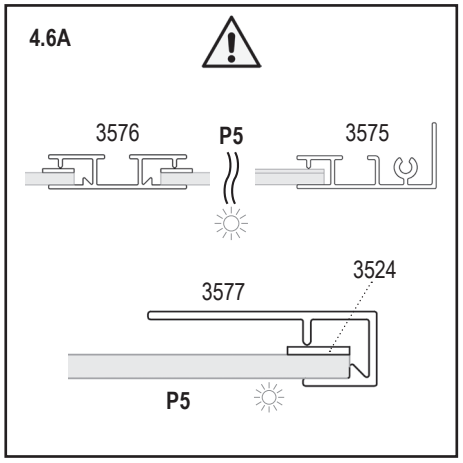

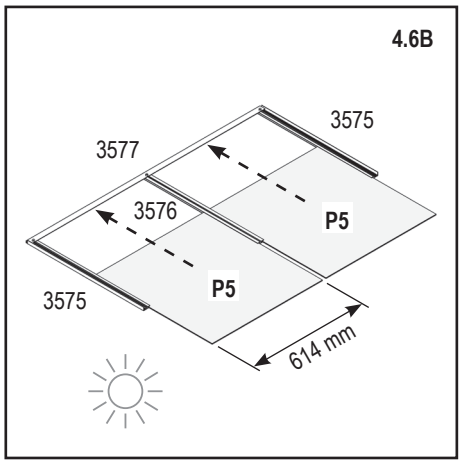

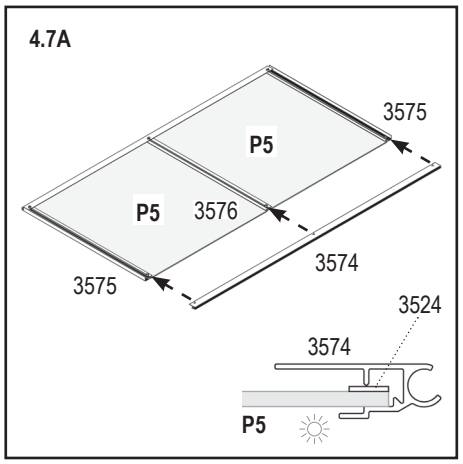

Important! Outside Recycle

E.P.H. Schmidt u. Co. GmbH
Hoefkerstrasse 30
44149 Dortmund
Postfach 170163
44060 Dortmund
Deutschland
Tel.: +49 231 941655 0
Fax: +49 231 941655 99
www.eph-schmidt.de
verkauf@eph-schmidt.de

OPJ A/S
Volderslevvej 36 A
5260 Odense S
Danmark
Tel.: +45 66 15 10 30
Fax: +45 66 15 00 84
www.opj.dk
opj@opj.dk

0115FPG_ASP.01.2509