54213-92
ABURO

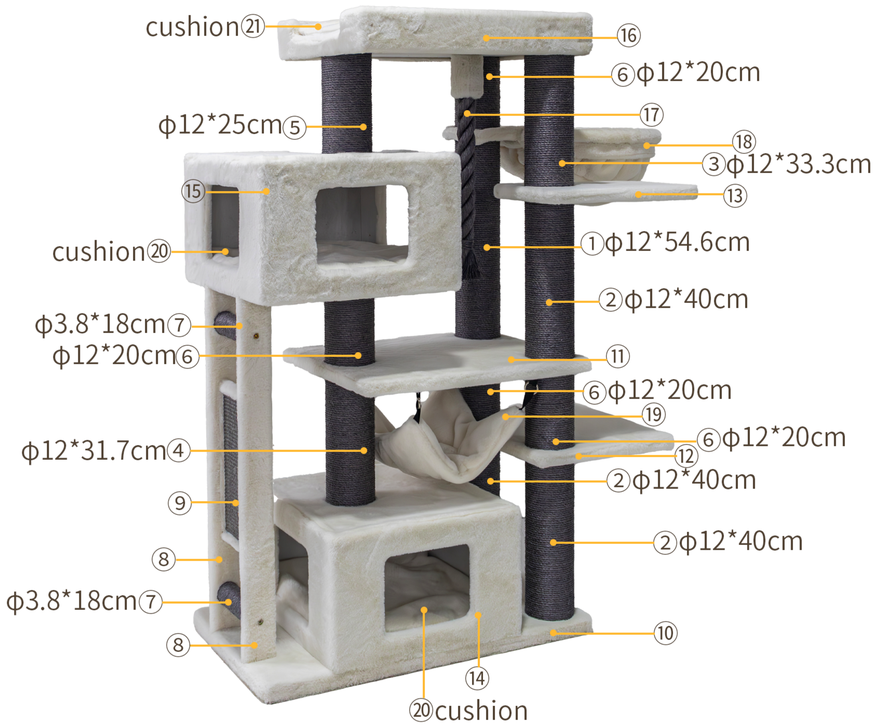

Please arrange all the parts in serial number as follows

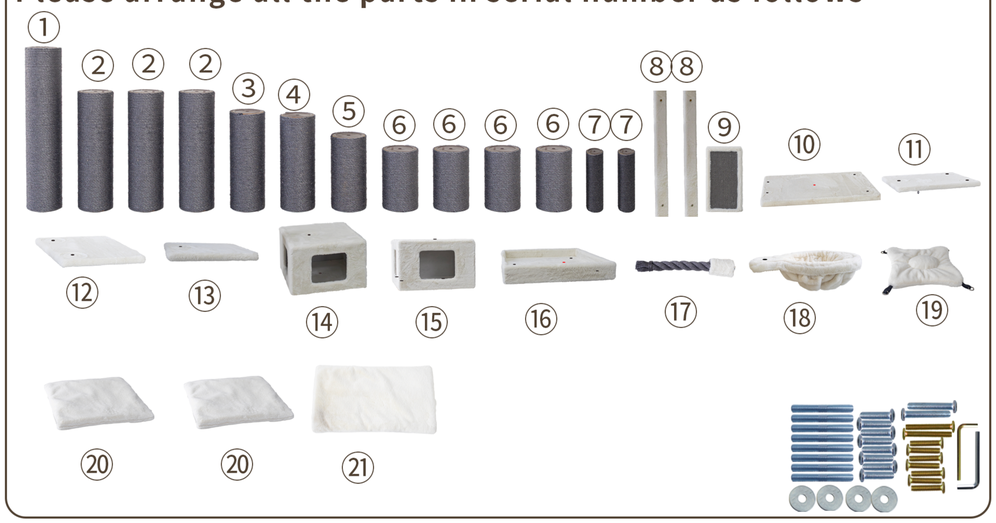

Component detail list

Parts	Size	Qty	S/N	Box
	ϕ12*54.6cm	1	①	2/3
	ϕ12*40cm	3	②	
	ϕ12*33.3cm	1	③	
	ϕ12*31.7cm	1	④	1/3
	ϕ12*25cm	1	⑤	2/3
	ϕ12*20cm	4	⑥	1/3=2 2/3=2
	ϕ3.8*18cm	2	⑦	2/3
	83.6*6*2cm	2	⑧	2/3
	36.5*19*1.5cm	1	⑨	3/3
	85*48*4cm	1	⑩	2/3
	60*48*2cm	1	⑪	3/3
	48*40*2cm	1	⑫	
	40*30*2cm	1	⑬	
	48*48*30cm	1	⑭	1/3
	48*48*30cm	1	⑮	
	60*48*8cm	1	⑯	3/3
	50cm	1	⑰	2/3
	ϕ45*16cm	1	⑱	3/3
	42*42cm	1	⑲	1/3
	46*46cm	2	⑳	
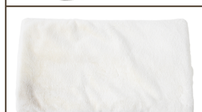	58*46cm	1	㉑	

Screw list 1:1

Size	scale	Qty	S/N	Box
ϕ10*80mm	1:1	7+1	A	1/3



ϕ10*60mm	1:1	2	B	1/3

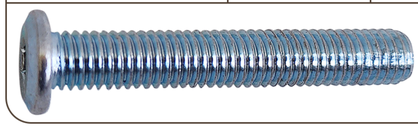

ϕ10*40mm	1:1	7+1	C	1/3

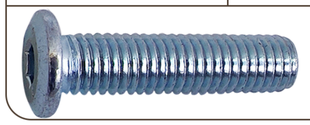

ϕ8*60mm	1:1	2	D	1/3

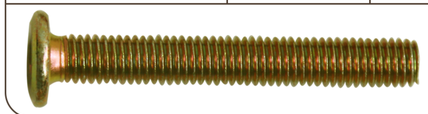

ϕ8*40mm	1:1	6+1	E	1/3



ϕ35mm	1:1	4	F	1/3





Assembly Manual

1 Step1

Please follow the parts and screws in the parts bar for installation.

⑦ϕ3.8*18cm

⑧83.6*6*3cm

⑨36.5*19*1.5cm

E*4

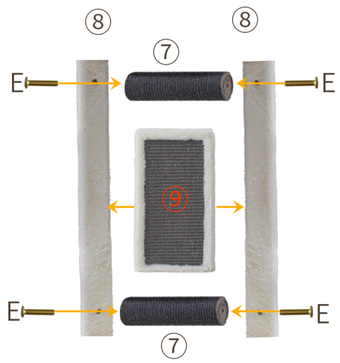

2 Step2

Step1

② ϕ12*40cm

⑩85*48*4cm

⑭48*48*30cm

B*2 C*1

D*2 F*4

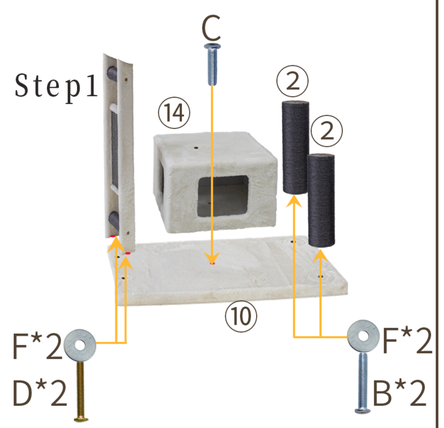

3 Step3

④ϕ12*31.7cm

⑥ϕ12*20cm

⑫48*40*2cm

A*2 C*1

F*1

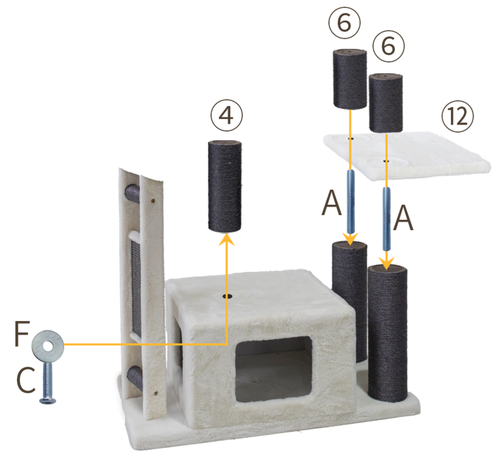

4 Step4

①ϕ12*54.6cm

② ϕ12*40cm

⑥ϕ12*20cm

⑪60*48*2cm

A*3

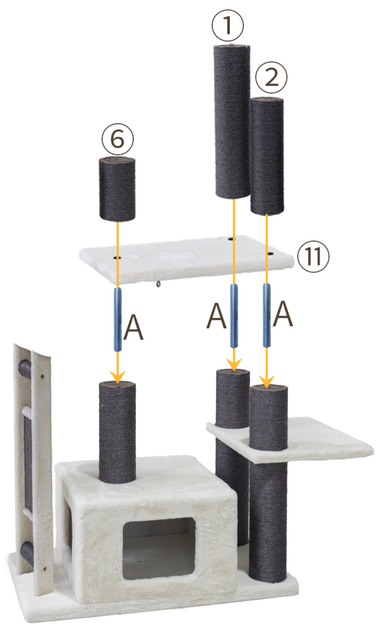

5 Step5

③ϕ12*33.3cm

⑤ϕ12*25cm

⑥ϕ12*20cm

⑬40*30*2cm

⑮48*48*30cm

⑱ϕ45cm

A*2 C*2

E*2 F*1

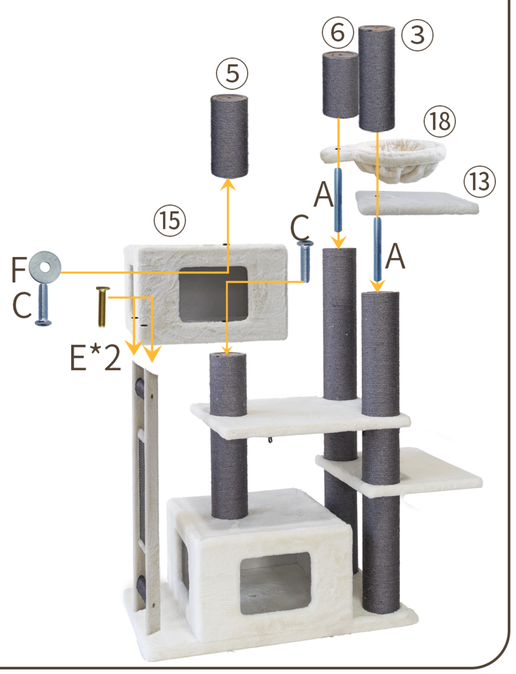

6 Step6

⑯60*48*8cm

⑰50cm

42*42cm

⑳46*46cm

㉑58*46cm

C*3

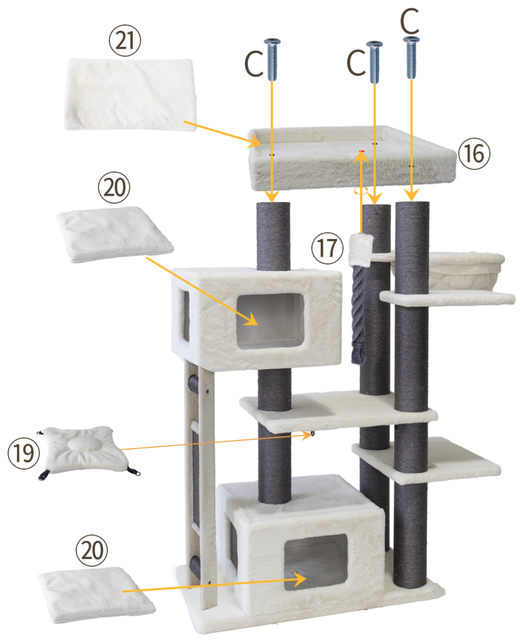

- A ϕ10*80mm
- B ϕ10*60mm
- C ϕ10*40mm
- D ϕ8*60mm
- E ϕ8*40mm
- F ϕ35mm