54203-28

BRUSH L

Color is only for reference

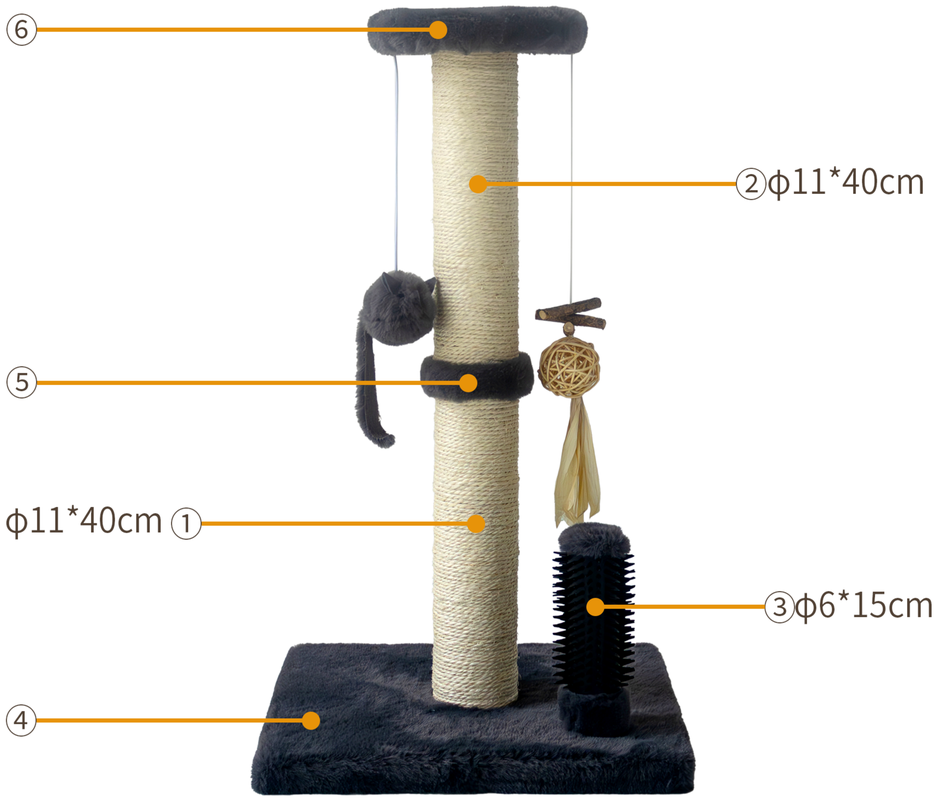

Component detail list

Parts	Size	Qty	S/N	Box
	ϕ11*40cm	1	①	1/1
	ϕ11*40cm	1	②	
	ϕ6*15cm	1	③	
	40*40*3cm	1	④	
	ϕ12*2cm	1	⑤	
	ϕ18.8cm	1	⑥	

Screw list

Size	Qty	S/N	Box
ϕ8*80mm	1	A	1/1
			
ϕ8*60mm	1	B	1/1
			
ϕ8*40mm	1	C	1/1
			
ϕ35mm	1	D	1/1
			



Please arrange all the parts in serial number as follows



① Step1



② Step2

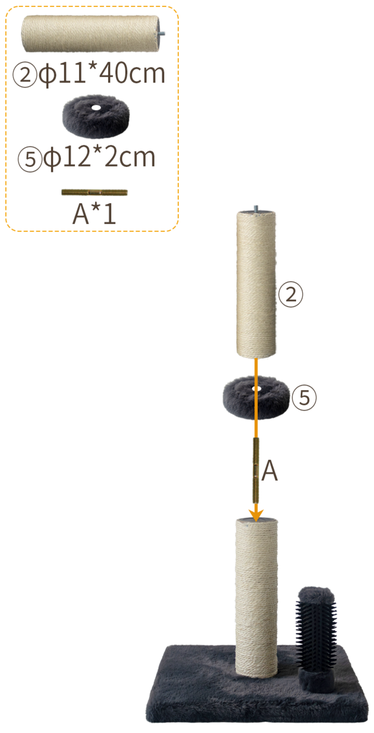

③ Step3

